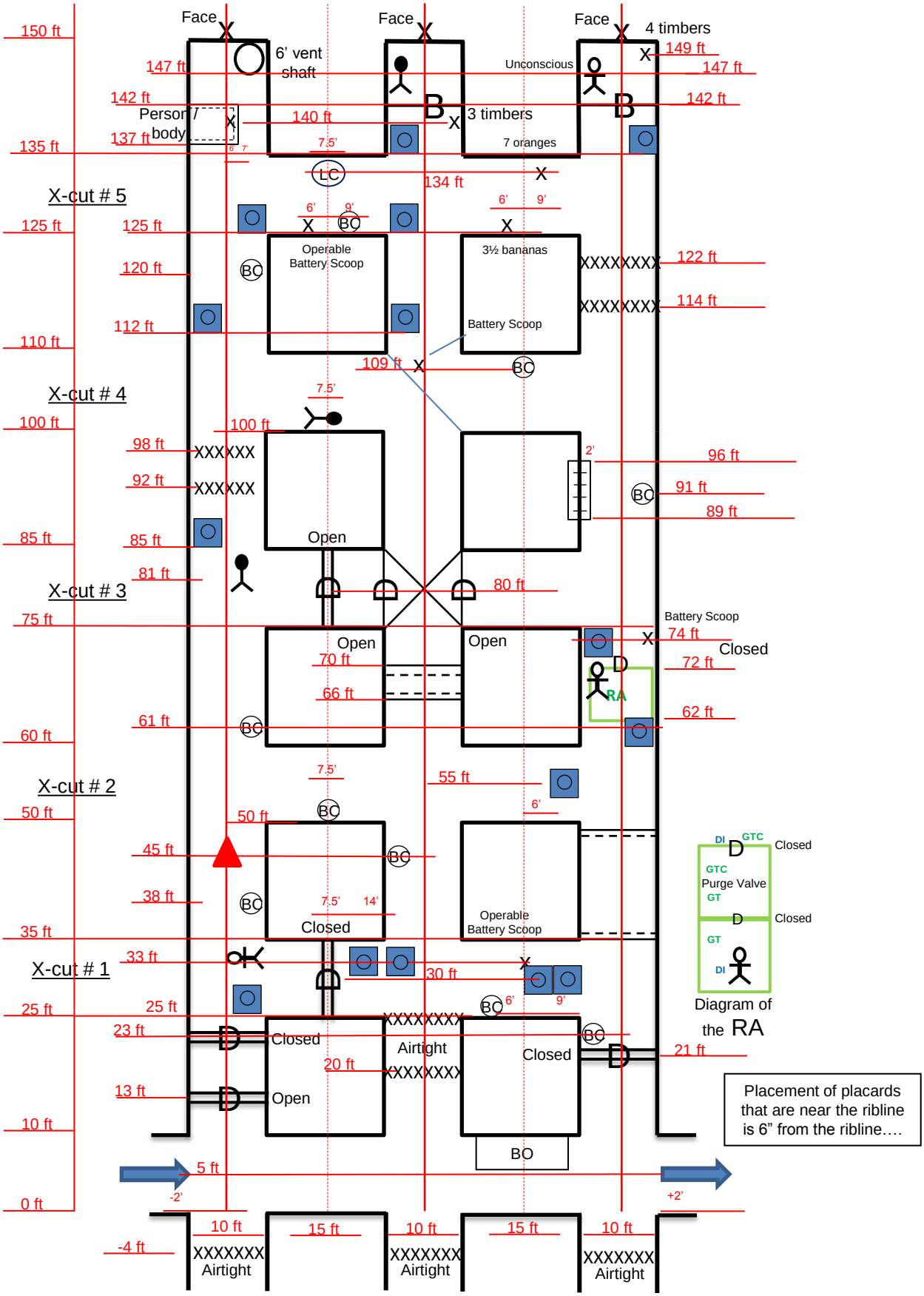Placard Layout Map